Centre Number	Candidate Number	Name

UNIVERSITY OF CAMBRIDGE INTERNATIONAL EXAMINATIONS
International General Certificate of Secondary Education

PHYSICS **0625/02**

Paper 2 Core

May/June 2006

1 hour 15 minutes

Candidates answer on the Question Paper.
No Additional Materials are required.

READ THESE INSTRUCTIONS FIRST

Write your Centre number, candidate number and name on all the work you hand in.
Write in dark blue or black pen.
You may use a soft pencil for any diagrams, graphs or rough working.
Do not use staples, paper clips, highlighters, glue or correction fluid.

Answer **all** questions.
You may lose marks if you do not show your working or if you do not use appropriate units.
Take the weight of 1 kg to be 10 N (i.e. acceleration of free fall = 10 m/s^2).
At the end of the examination, fasten all your work securely together.
The number of marks is given in brackets [ ] at the end of each question or part question.

For Examiner's Use

This document consists of **16** printed pages.

MML 10757 3/05 S99216/2
© UCLES 2006
www.root19.com
UNIVERSITY of CAMBRIDGE International Examinations
+91 - 9969 353 391
[Turn over

1 **(a)** For a special parade, the guest of honour is to sit on a chair whilst the parade passes by. Unfortunately the ground beneath the chair is soft, so the parade organisers put the chair on a large flat board, as shown in Fig. 1.1.

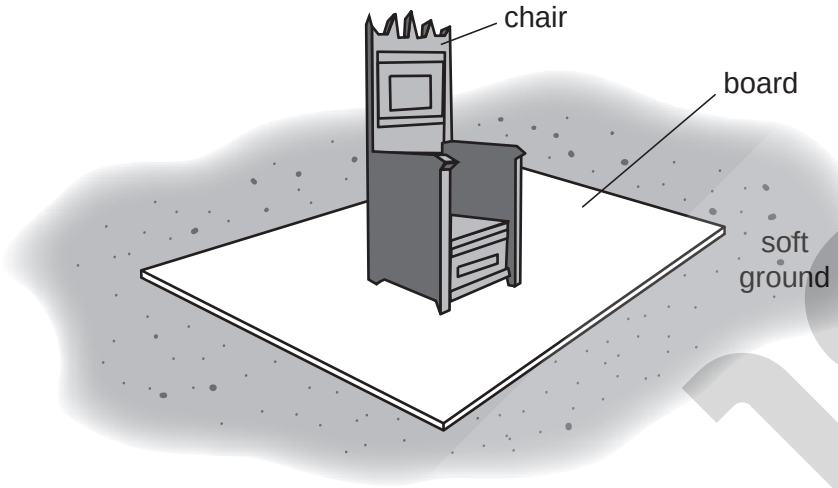

Fig. 1.1

Explain why the board prevents the chair from sinking into the ground.

.....

..... [2]

(b) At the parade, some air-filled balloons are used as decorations, as shown in Fig. 1.2.

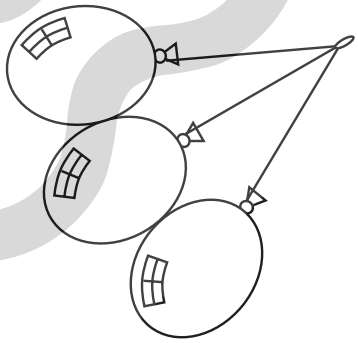

Fig. 1.2

(i) State what happens to the balloons when the Sun makes them hotter.

..... [1]

(ii) In terms of molecules, explain your answer to **(b)(i)**.

.....

..... [2]

© UCLES 2006
www.root19.com

+91 - 9969 353 391

(c) A pump is used to pump up the balloons in **(b)**. A valve in the pump becomes blocked, as shown in Fig. 1.3.

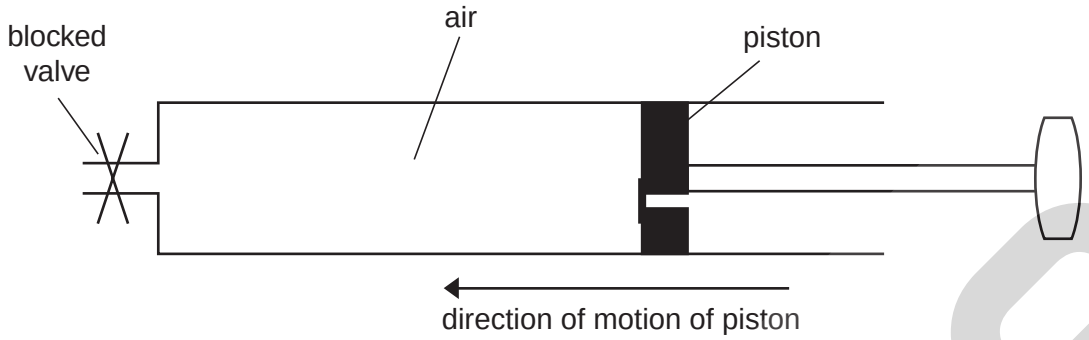

Fig. 1.3

(i) The piston of the pump is pushed in. State what happens to the pressure of the air trapped in the pump.

..... [1]

(ii) In terms of molecules, explain your answer to **(c)(i)**.

.....

..... [3]

© UCLES 2006
www.root19.com

+91 - 9969 353 091

For Examiner's Use

2 Fig. 2.1 is a full-size diagram of a rectangular block.

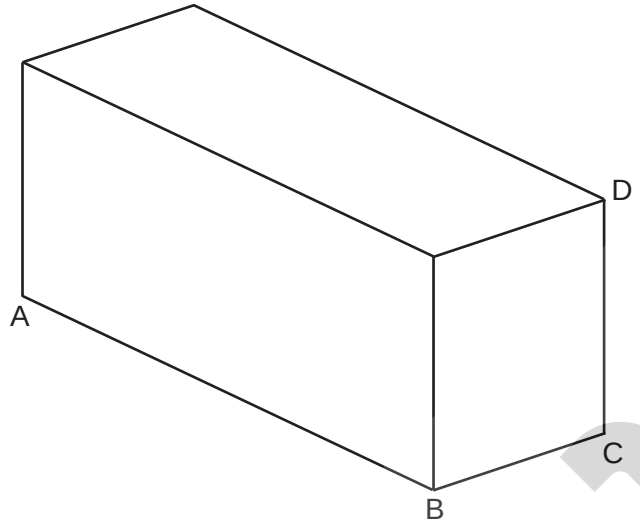

Fig. 2.1

(a) Use your rule to measure the lengths of the three sides AB, BC and CD. Write your values below, in cm, to 2 significant figures.

length of AB = ... cm

length of BC = ... cm

length of CD = ... cm [2]

(b) Write down the equation you would use to calculate the volume of the block. Do **not** attempt a calculation.

[1]

(c) If you used your values from **(a)**, what would be the unit for the volume of the block?

unit of volume = ... [1]

© UCLES 2006
www.root19.com

+91 - 9969 353 391

For Examiner's Use

3 Fig. 3.1(a) shows a measuring cylinder, containing some water, on a balance.

Fig. 3.1(b) shows the same arrangement with a stone added to the water.

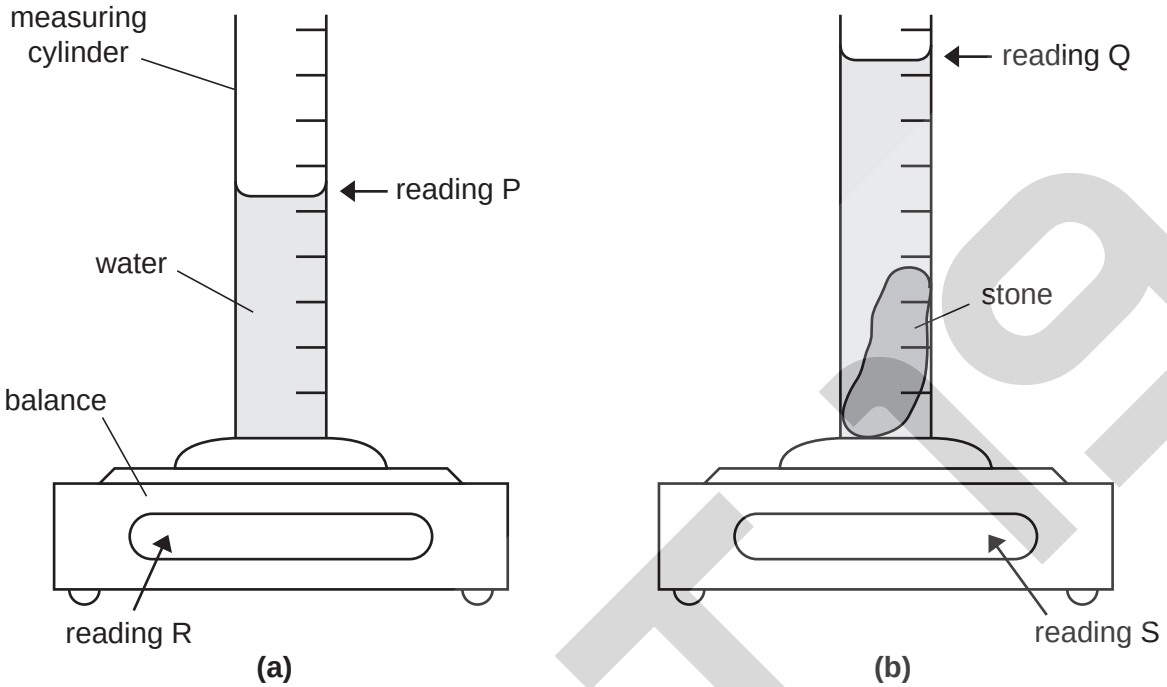

Fig. 3.1

(a) Which two readings should be subtracted to give the volume of the stone?

reading ..... and reading ..... [1]

(b) Which two readings should be subtracted to give the mass of the stone?

reading ..... and reading ..... [1]

(c) In a certain experiment,

mass of stone = 57.5 g,

volume of stone = 25 cm^3.

(i) Write down the equation linking density, mass and volume.

[1]

(ii) Calculate the density of the stone.

density of stone = ... [3]

© UCLES 2006
www.root19.com

+91 - 9969 353 091

4 A piece of fruit is falling from a tree.

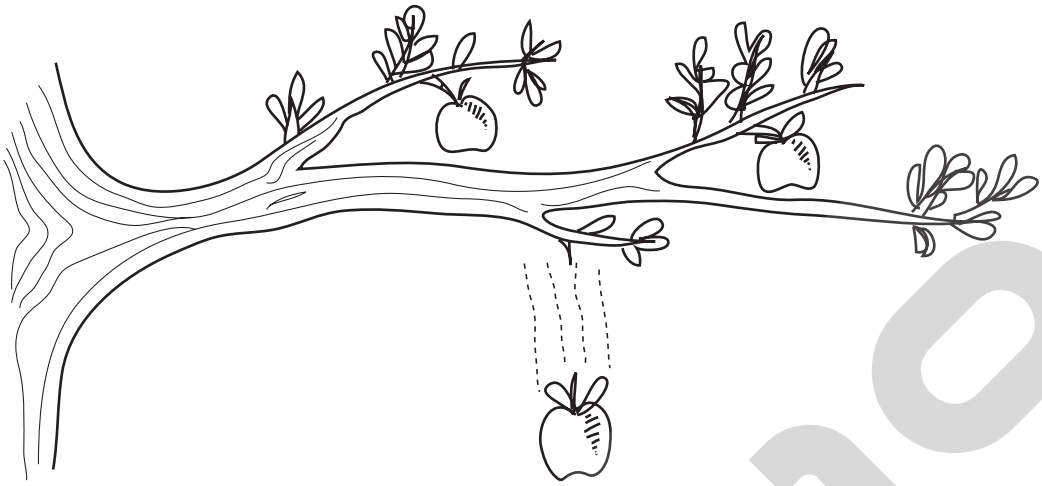

Fig. 4.1

(a) The list below contains the names of some different forms of energy.

Put a tick in the box alongside **four** that are possessed by the falling fruit.

- chemical ☐
- electrical ☐
- gravitational (PE) ☐
- internal (thermal) ☐
- kinetic (KE) ☐
- light ☐
- sound ☐
- strain ☐ [4]

(b) Which form of energy increases as the fruit falls?

..... [1]

(c) Which form of energy decreases as the fruit falls?

..... [1]

(d) Which form of energy is stored in the body of a person as a result of eating the fruit?

..... [1]

© UCLES 2006
www.root19.com

+91 - 9969 353 391

5 **(a)** State two changes that usually happen to the molecules of a solid when the solid is heated.

1. .....

2. ..... [2]

(b) Most substances expand when they are heated.

(i) State one example where such expansion is useful.

..... [1]

(ii) State one example where such expansion is a nuisance, and has to be allowed for.

..... [1]

6 Fig. 6.1 shows a section through a series of waves on water.

Fig. 6.1

(a) On Fig. 6.1, carefully mark and label

(i) the wavelength of the waves, [2]

(ii) the level of the flat, still water surface after the waves have passed. [2]

(b) Describe how, using a stopwatch, the frequency of the waves could be found.

.....

.....

..... [2]

© UCLES 2006
www.root19.com

+91 - 9969 353 091

For Examiner's Use

7 **(a)** Fig. 7.1 shows a ray of blue light shining onto a glass prism.

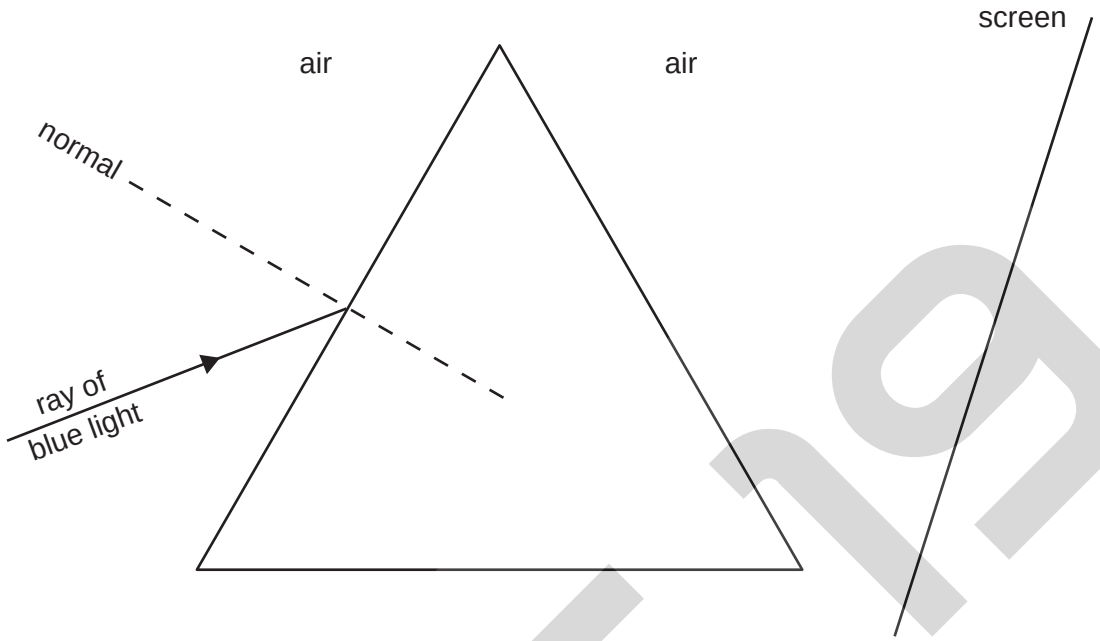

Fig. 7.1

With the aid of a straight edge, draw a possible path of the ray through the prism and into the air until it reaches the screen. [3]

(b) When a ray of white light passes through the prism, it spreads into a spectrum of colours that can be seen on the screen.

(i) What is the name of this spreading effect? Tick one box.

convergence ☐

diffraction ☐

dispersion ☐

reflection ☐ [1]

(ii) Which colour is deviated least by the prism? ..... [1]

(iii) Which colour is deviated most by the prism? ..... [1]

© UCLES 2006
www.root19.com

+91 - 9969 353 391

For Examiner's Use

8 **(a)** State what is meant by the *north pole* of a magnet.

.....

..... [2]

(b) The north poles of two magnets are brought close together.

What sort of force, if any, is there between the poles? Tick one box.

attractive ☐

repulsive ☐

no force ☐ [1]

(c) Fig. 8.1 shows the north pole of a magnet close to an iron bar.

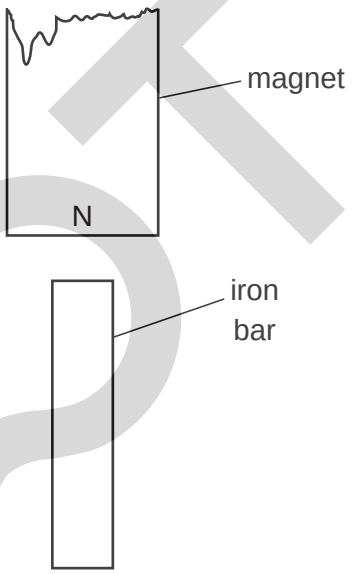

Fig. 8.1

(i) The iron bar is attracted to the north pole because of induced magnetism in the iron bar.

On Fig. 8.1, mark clearly the induced north pole and the induced south pole of the iron bar. [1]

(ii) State what happens to the induced magnetism in the iron bar when the magnet is taken away.

..... [1]

© UCLES 2006
www.root19.com

+91 - 9969 353 391

For Examiner's Use

9 **(a)** The table below gives the half-lives of three radioactive substances.

substance	half-life
iodine-128	25 minutes
radon-222	3.8 days
strontium-90	28 years

Samples of each of the three substances have the same activity today. Which sample will have the greatest activity in 1 year's time? Explain your answer.

substance with greatest activity after 1 year .....

explanation .....

..... [2]

(b) In 1986, an explosion at the Chernobyl nuclear power station released radioactive substances into the air. One of the radioactive substances released was iodine-131. Some of the iodine-131 found its way into cow's milk.

The activity of a sample of this contaminated milk was measured each week for 4 weeks. The results are shown below.

time / days	0	7	14	21	28
activity / counts / s	1000	547	294	162	88

© UCLES 2006
www.root19.com

+91 - 9969 353 391

For Examiner's Use

(i) On Fig. 9.1, plot the values given in the table.

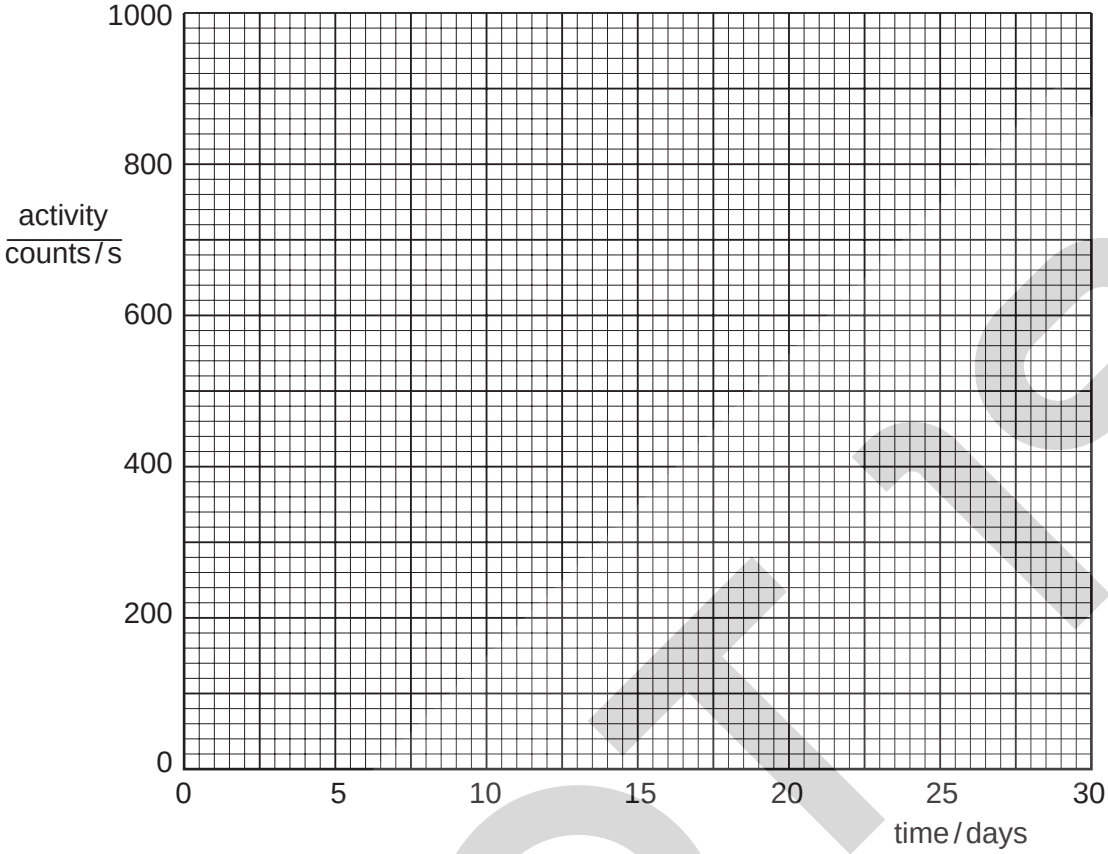

Fig. 9.1

(ii) Draw the best-fit curve through your points.

(iii) Use your graph to find the half-life of iodine-131, showing clearly on your graph how you obtained your value.

half-life of iodine-131 = ... days
[6]

© UCLES 2006
www.root19.com

+91 - 9969 353 091

For Examiner's Use

10 **(a)** Fig. 10.1 shows a type of tube in which cathode rays can be produced.

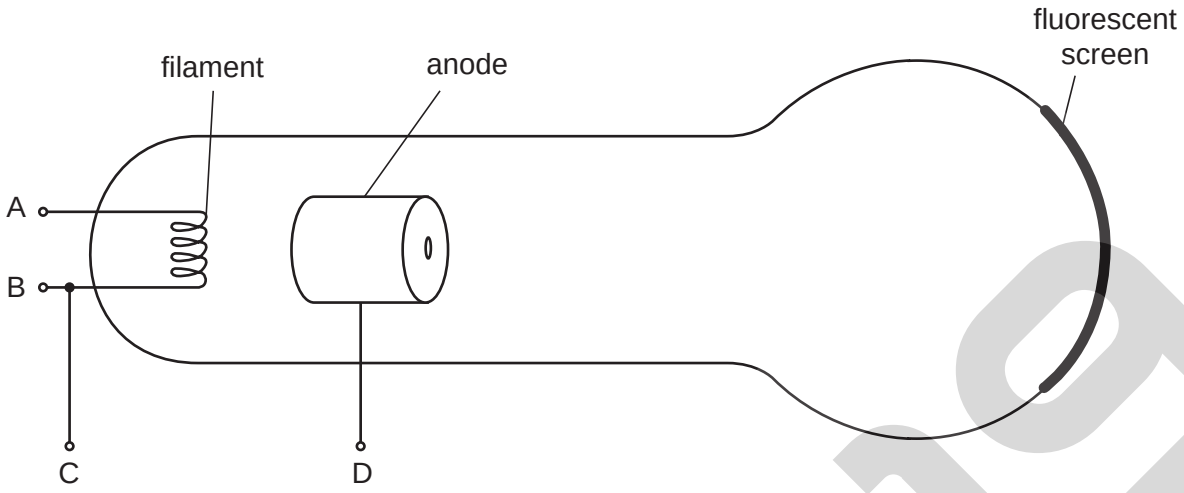

Fig. 10.1

(i) A p.d. is connected between two terminals in order to cause thermionic emission. Between which two of the four labelled terminals is the p.d. connected?

between point ..... and point ..... [1]

(ii) Where does the thermionic emission occur?

..... [1]

(iii) What particles are emitted during thermionic emission? Tick one box.

α-particles ☐

electrons ☐

neutrons ☐

protons ☐ [1]

(iv) On Fig. 10.1, draw the path of the cathode rays that are created when all the electrical connections are correctly made. [1]

(v) State what is seen when the cathode rays strike the fluorescent screen.

..... [1]

© UCLES 2006
www.root19.com

+91 - 9969 353 391

For Examiner's Use

(b) Fig. 10.2 shows the same tube as in Fig. 10.1, with two metal plates alongside the tube. A high p.d. is connected between the plates.

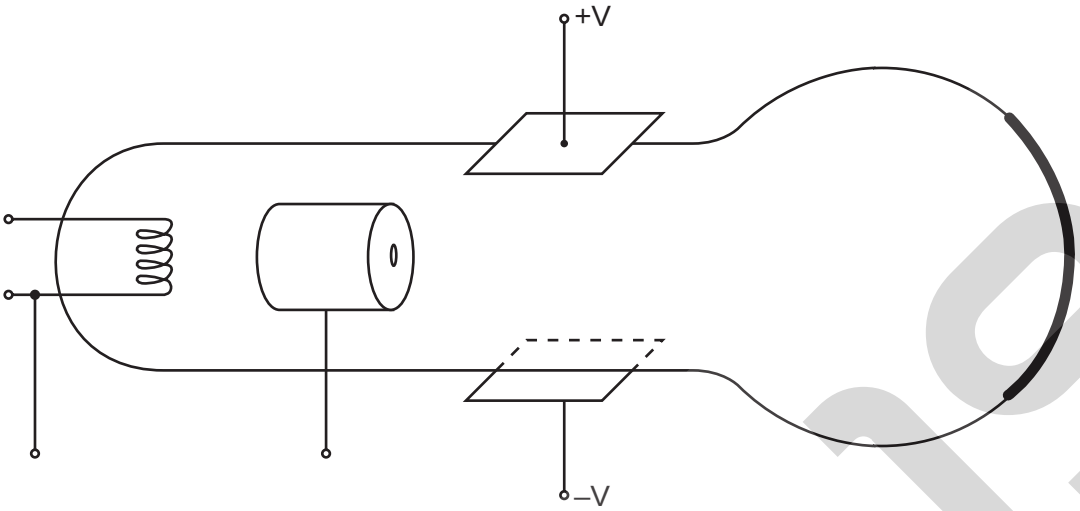

Fig. 10.2

On Fig. 10.2, draw the path of the cathode rays. [3]

(c) The tube in Fig. 10.1 and Fig. 10.2 has a vacuum inside it.

State why this vacuum is necessary.

.....

..... [1]

© UCLES 2006
www.root19.com

+91 - 9969 353 091

For Examiner's Use

11 Fig. 11.1 illustrates part of the journey of a car.

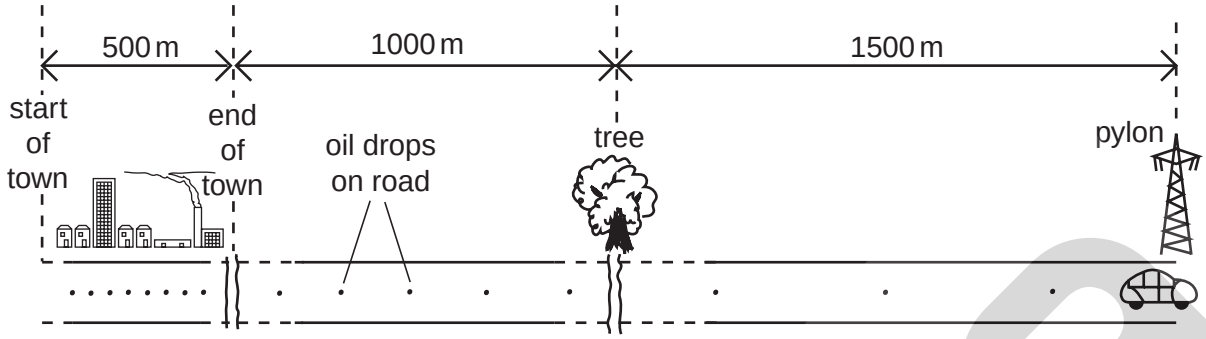

Fig. 11.1

The car engine is leaking oil. Regularly, every 2.5 s, a drop of oil hits the road.

(a) The car is driven at a steady speed of 10 m/s through the town.

(i) Calculate the distance on the road between one oil drop and the next oil drop.

distance between oil drops = ... m [2]

(ii) The town is 500 m across. Show that it takes the car 50 s to travel through the town.

[3]

(b) At a distance of 1000 m outside the town, the car passes a tree. At a further distance of 1500 m, the car passes a pylon. Between the tree and the pylon the oil drops are all 75 m apart.

Calculate the speed of the car between the tree and the pylon.

speed of car = ... m/s [2]

© UCLES 2006
www.root19.com

+91 - 9969 353 391

For Examiner's Use

(c) What has happened to the car between the end of the town and the tree?

Tick one box.

The car has accelerated. ☐

The car has decelerated. ☐

The car has travelled at constant speed. ☐ [1]

(d) Each of the three parts of the journey takes 50 s.

Calculate the average speed of the car for the whole journey between the beginning of the town and the pylon.

average speed = ... m/s [5]

© UCLES 2006
www.root19.com

+91 - 9969 353 091

For Examiner's Use

12 In the boxes of the left column below are some electrical hazards. In the boxes of the right column are means of protecting against those hazards.

From each hazard, draw a line to the appropriate protection. One line has been drawn as an example.

electrical hazard	**means of protection**
loose live wire touches metal case of appliance	fuse or circuit-breaker in the circuit
worn insulation on cable to an appliance	use of switches with a nylon pull-cord
steam in a washroom condenses inside a switch	earth wire connected to the metal case of the appliance
wires get hot because current is too high	visual check of cables before connecting appliance

[3]

Permission to reproduce items where third-party owned material protected by copyright is included has been sought and cleared where possible. Every reasonable effort has been made by the publisher (UCLES) to trace copyright holders, but if any items requiring clearance have unwittingly been included, the publisher will be pleased to make amends at the earliest possible opportunity.

University of Cambridge International Examinations is part of the University of Cambridge Local Examinations Syndicate (UCLES), which is itself a department of the University of Cambridge.